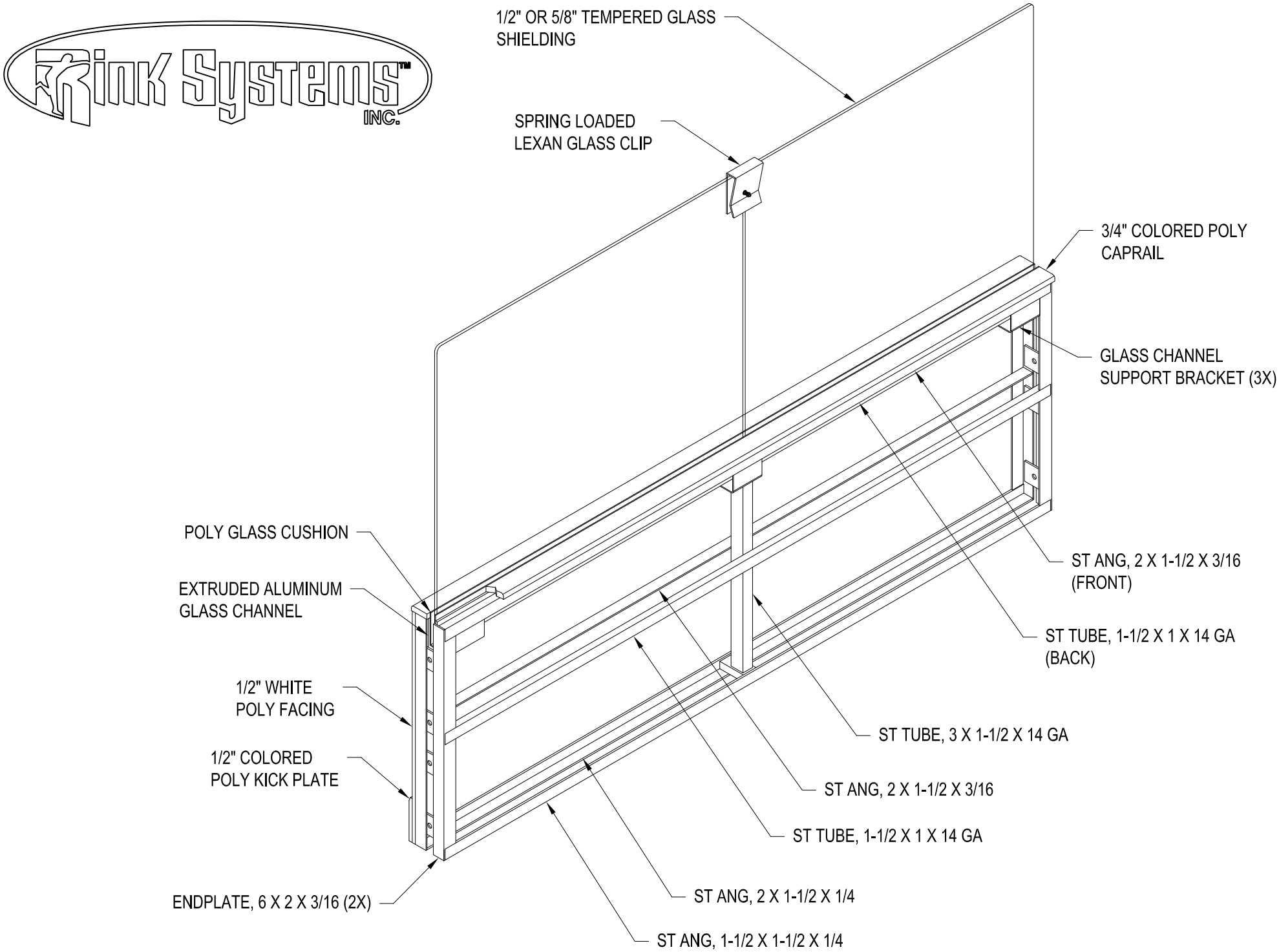

LEGACY ELITE - STEEL SEAMLESS